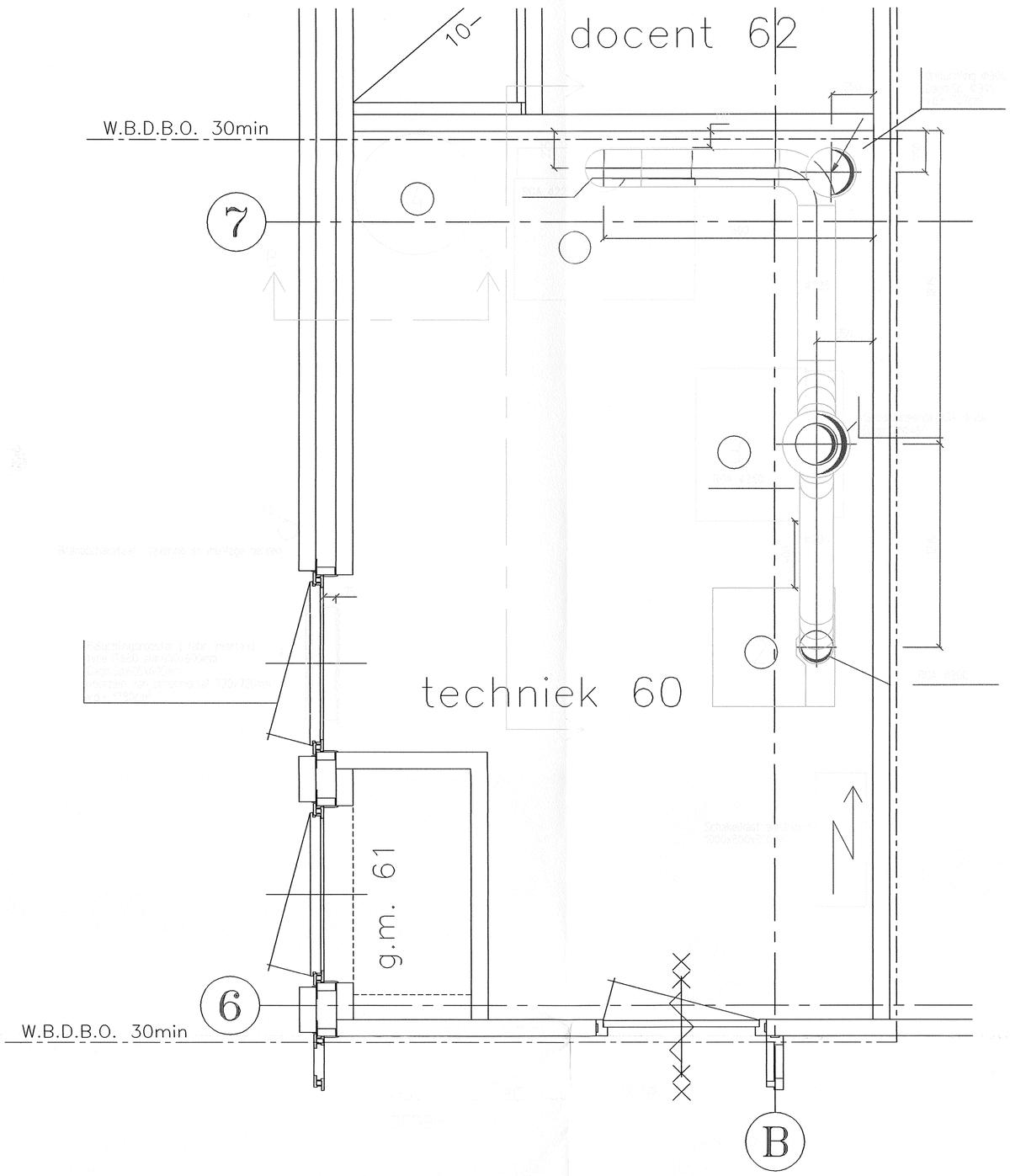

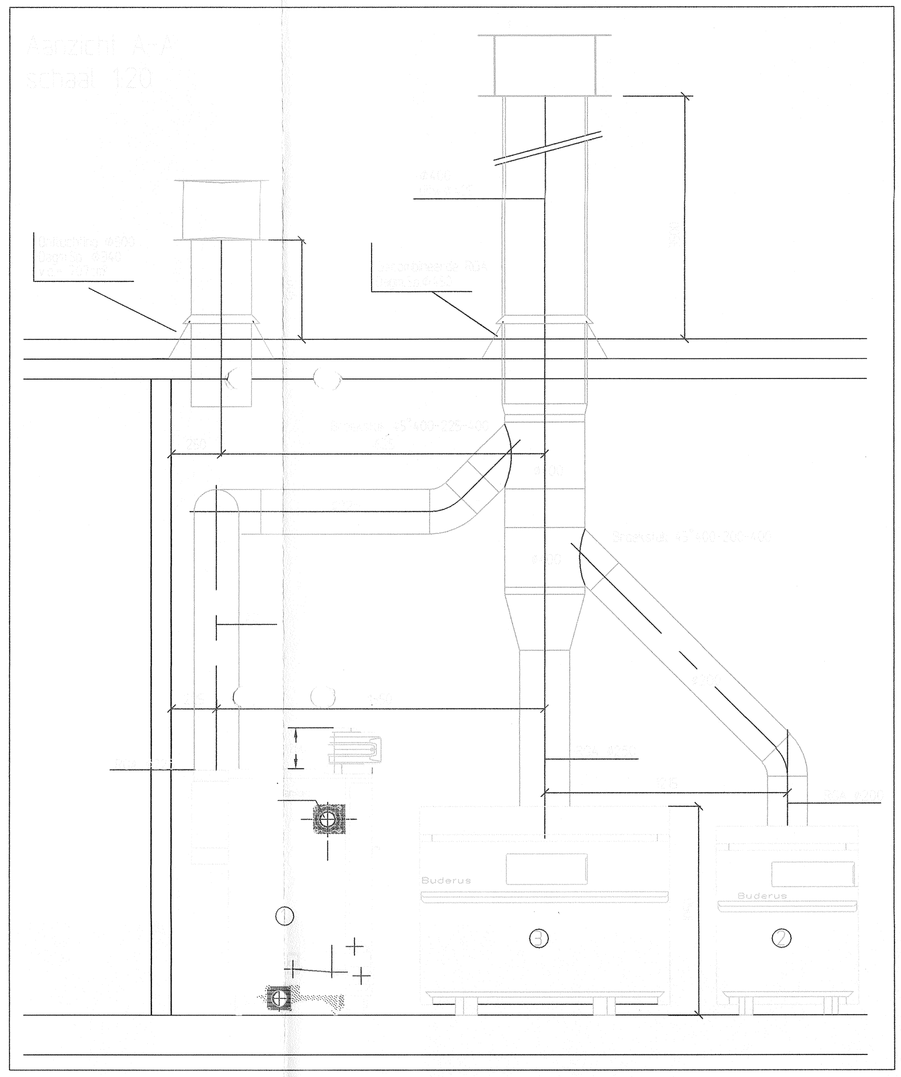

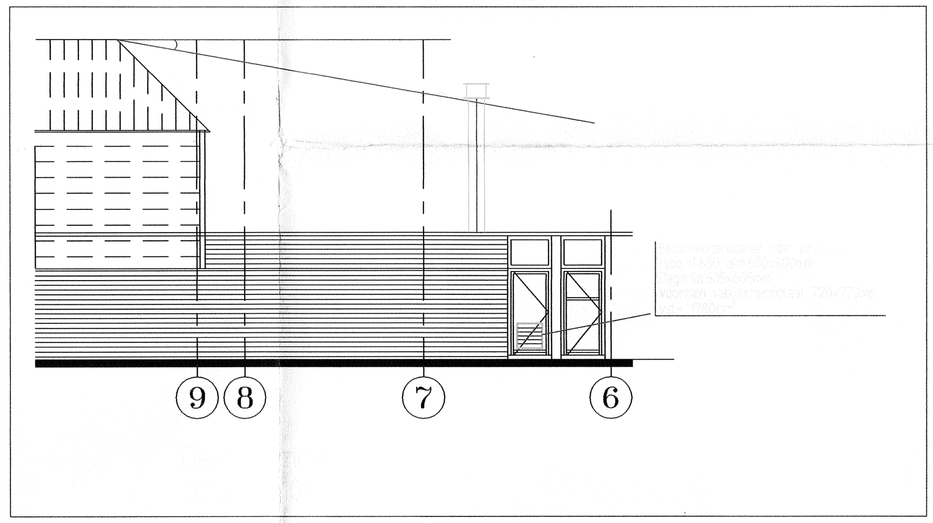

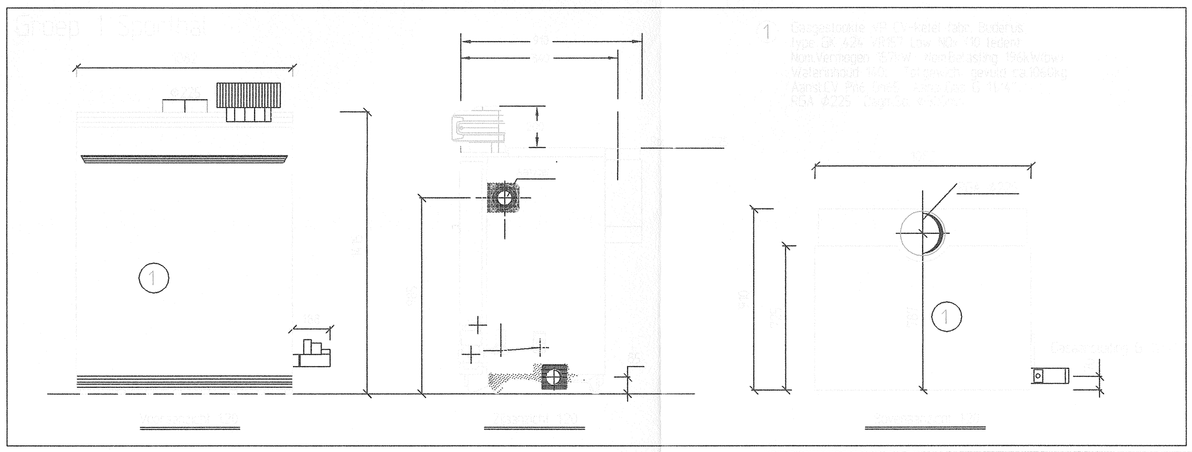

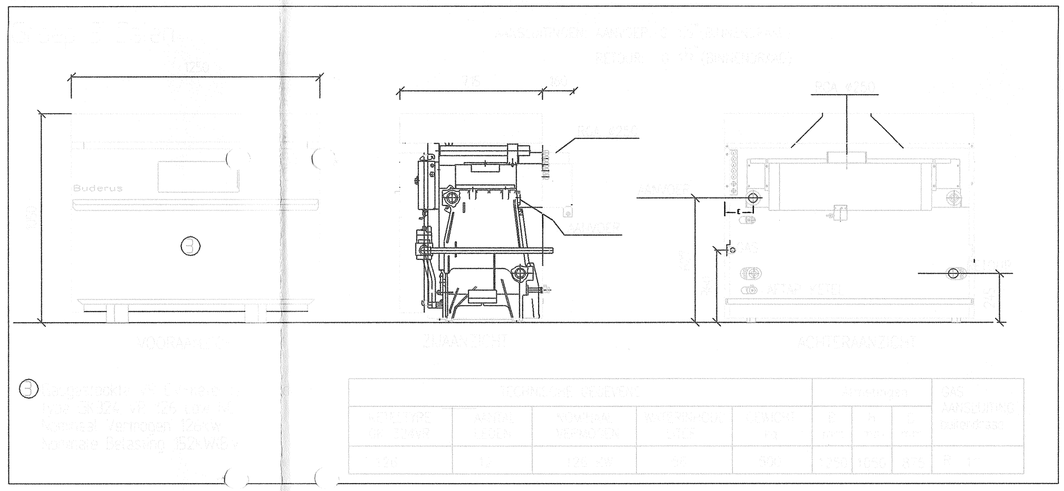

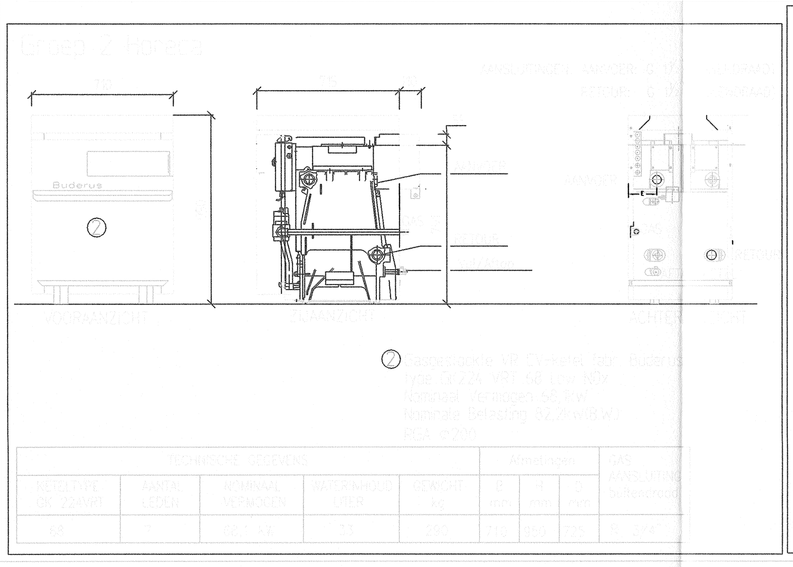

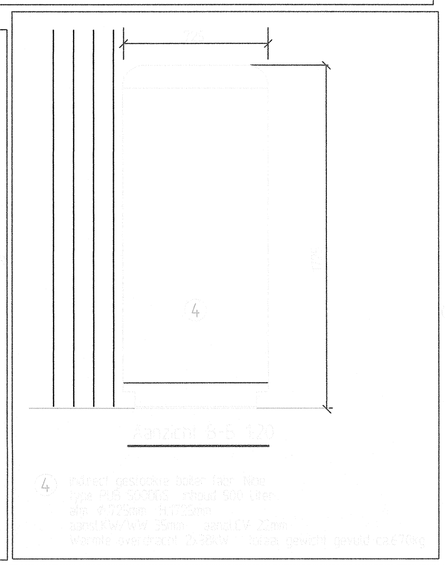

Inrichting vlgs. eisen GAVO/NEN 1078 - Stookruimte.